Assembly Instructions
The overall structure can be seen on the right

1.Letter A.B.C...stands for hardware and fastener

Fitting		
PIC	ITEM	QTY
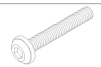	A	14pcs
	B	1pcs

Exploding diagram

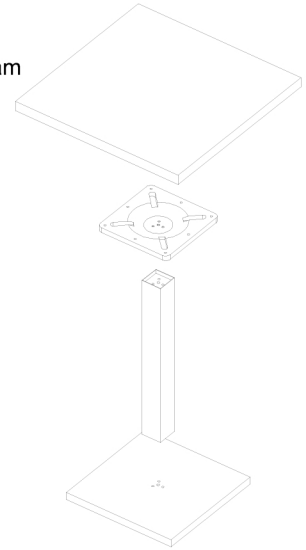

一、

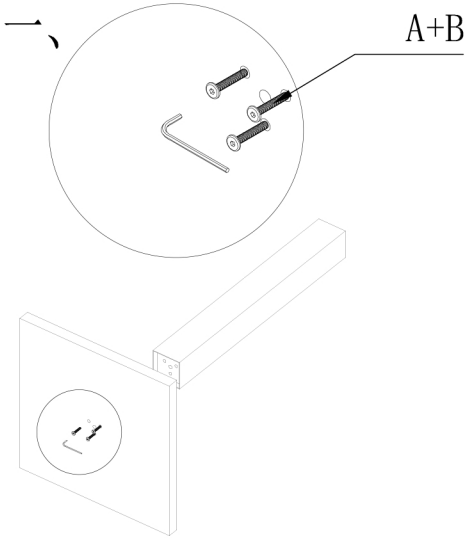

二、

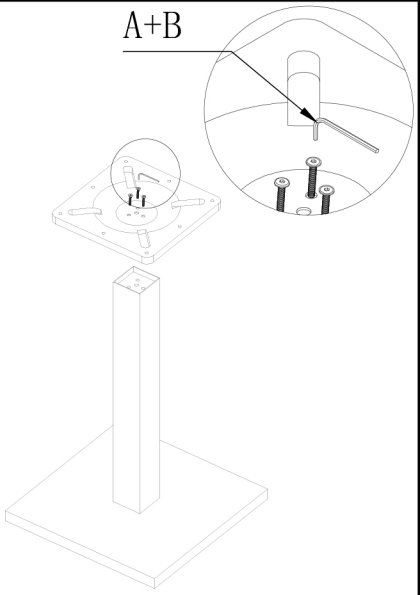

三、

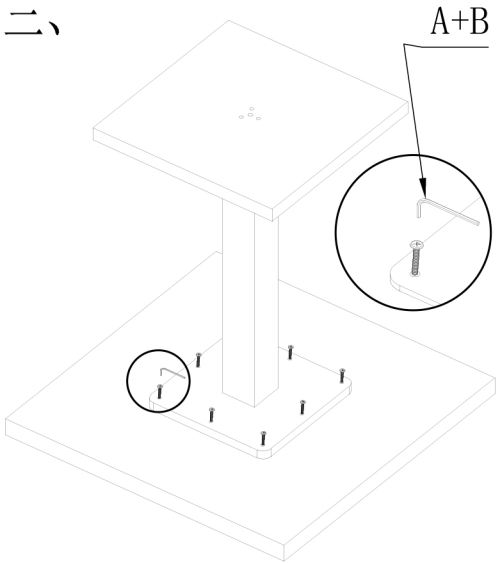

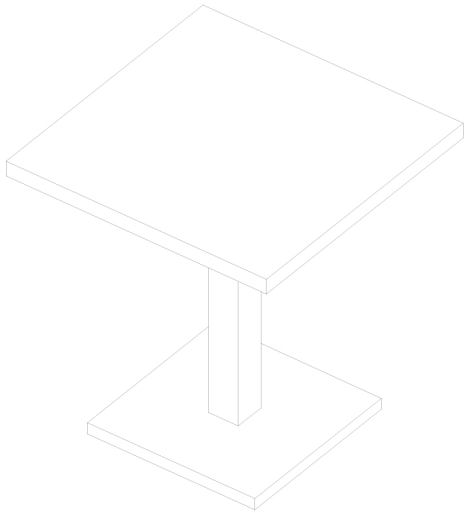

GastroYou
RESTAURANT • HOTEL • BAR